TUNNEL54 INTERLOCKES SOCKET-OUTLET WITH 1 AUXILIARY CONTACT + PLUG IN ALUMINIUM 3P+E 63A 690V 5H IP66 FOR SINGLE-POLE CABLES (400°c/120')

SERIES ALUPRES-T54
SOCKET+PLUG

CODE 151612

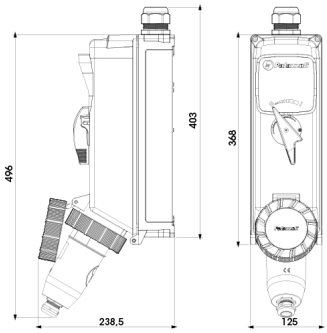

Datasheet

Electrical characteristics

Rated current	63A
Supply Voltage	600-690V 50/60Hz●
Poles	3P+ ⏚
Clock Position	5h
Rated insulation voltage	690 V
Insulation Class	I
Type of protection	-
Signal plug inserted	1 contact pilot

Mechanical characteristics

Manufacturing material	Marine aluminium alloy (EN 44300)
Treatment type	Fluorozirconic passivation
Surface finishing	Non-toxic polyester paint anti UV curing in the oven
Color	Blue RAL 5012, Grey RAL 7035
Width	125 mm
Execution	Wall mounting
Hole type	3xM25 (Ø8÷16mm)
IP Protection degree	IP66
Additional IPdegree protection	-
Shock resistance	IK10 according to IEC/EN 62262
Resistance to Glow wire	960°C (Live contacts)
Flame rating according UL94	V-0 (Live contacts)
Corrosivity category	C4 (ISO 12944)
Net Weight	6 KG
Working Environment Temp.	Min: -25°C ;Max: +50°C
Warehousing Temperature	Min: -30°C ;Max: +70°C

Equipment Included	1 M40 mobile input plug (Ø15÷27mm). External ground M6 threaded hole

Technical data switch

Thermal current	63 A
Rated short-circuit current	10 kA
Terminals type	Screw - indirect clamping
Conductors section (Cu)	Min: 6 ;Max: 35 mm²
Terminal tightening torque	3 Nm
Auxiliary status contacts	-
Padlockable handle	1 lock Ø6 mm max

Operating category

Categoria Rating	Tensione Voltage	Corrente / Potenza Current / Power
AC-22A	230 V	63 A
	400 V	63 A
	500 V	63 A
AC-23A	230 V	63 A
	400 V	63 A
	500 V	63 A
AC-23A	230 V	20.1 kW
	400 V	34.9 kW
	500 V	43.6 kW
AC-3	230 V	17.5 kW
	400 V	30.5 kW
	500 V	38.1 kW

Atex characteristics

Dust Atex execution (Tmax1)	-
Gas Atex execution (Tmax1)	-

Reference Standards and Directives

Certification and approval marks	CE, INTEK FIRE, UKCA
Directives	2011/65/EU (RoHS), 2012/19/EU (WEEE), 2014/35/EU (LVD)
Reference Standards	CEI 64-20/V1:2024, CEI 64-20:2023, EN IEC 60309-1:2022, EN IEC 60309 -1:2022/AC:2023-06, EN IEC 60309-2:2022, EN IEC 60309-4:2022, EN IEC 60947-3:2021, EN IEC 63000:2018

The images are purely indicative. Palazzoli reserves the right to make changes without notice.

Palazzoli S.p.A. - Società unipersonale - Via F. Palazzoli, 31 - 25128 Brescia - Italy - tel. +39 030 2015.1 - fax +39 030 2015.258 - www.palazzoli.com - export@palazzoli.it